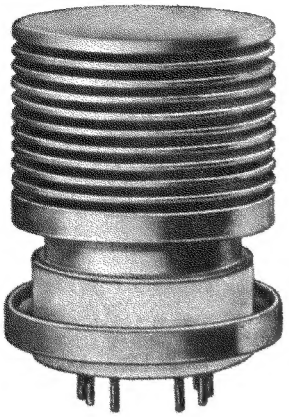

Actual Size

8121

BEAM POWER TUBE

2.20" Max. Length
1.475" Max. Diameter
Integral Radiator

Full Ratings up to 500 Mc
Forced-Air Cooled
170 Watts PEP Output at 30 Mc
235 Watts CW Output at 470 Mc

Coaxial-Electrode Structure
Ceramic-Metal Seals
Unipotential Cathode

RCA-8121 is a very small, low-cost, forced-air-cooled beam power tube designed for use as an rf power amplifier, oscillator, regulator, distributed amplifier, or linear rf power amplifier in mobile or fixed equipment.

Because of its high power sensitivity and high efficiency, the 8121 can be operated with relatively low plate voltage to give large power output with small driving power. In CW operation with a plate voltage of 1500 volts, the 8121 can provide useful power outputs of 235 watts up to 500 Mc.

The specially designed radiator makes possible a simplified arrangement for the air to flow in a transverse direction to the major axis of the radiator permitting a maximum plate dissipation of 150 watts.

The 8121 features a light-weight, cantilever-supported cylindrical electrode structure within a ceramic-metal envelope. This construction provides a very sturdy tube and permits high-temperature operation.

The terminal arrangement of the 8121 facilitates use of the tube with tank circuits of the coaxial or strip-line type. Effective isolation of the output circuit from the input circuit is provided at the higher frequencies by the low-inductance ring terminal for grid No.2. A base-pin termination for grid No.2 is also available for operation of the 8121 at the lower frequencies.

The tripod arrangement of both the cathode and the grid-No.1 leads not only simplifies construction, but enhances electrical characteristics. The three cathode leads reduce the inductance path to rf ground and reduce the input admittance at high frequencies. One of the cathode leads (preferably No.4 pin) may be series tuned to ground with a capacitor to provide broadband neutralization in the upper frequency range of the tube. The three grid-No.1 leads to separate pins accommodate a split-input circuit for distributed amplifier service.

GENERAL DATA

Electrical:

Heater, for Unipotential Cathode:		
Voltage (AC or DC)[a]	13.5 ± 10%	volts
Current at 13.5 volts	1.3	amp
Minimum heating time	60	sec
Mu-Factor, Grid No.2 to Grid No.1 for plate volts = 450, grid-No.2 volts = 325, and plate amperes = 1.2	12	
Direct Interelectrode Capacitances:[b]		
Grid No.1 to plate	0.13 max.	pf
Grid No.1 to cathode	16	pf
Plate to cathode	0.011	pf
Grid No.1 to grid No.2	22	pf
Grid No.2 to plate	6.5	pf
Grid No.2 to cathode	3.2	pf
Cathode to heater	3.4	pf

Mechanical:

Operating Position	Any
Maximum Overall Length	2.196"
Seated Length	1.850" ± 0.065"
Greatest Diameter	1.460" ± 0.015"
Base—Large Wafer Elevenar 11-Pin with Ring (JEDEC No.E11-81)	
Socket	Mycalex* No.CP464-2, or equivalent
Weight (Approx.)	3 oz

Thermal:

Terminal Temperature (All Terminals)	250 max.	°C
Radiator Core Temperature (See *Dimensional Outline*)	250 max.	°C
Air Flow:		
See Fig.8 – *Typical Cooling Requirements for Type 8121.*		

LINEAR RF POWER AMPLIFIER
Single-Sideband Suppressed-Carrier Service

Peak envelope conditions for a signal having a minimum peak-to-average power ratio of 2

Maximum CCS Ratings, *Absolute-Maximum Values:*

	Up to 500 Mc	
DC PLATE VOLTAGE	2200 max.	volts
DC GRID-No.2 VOLTAGE	400 max.	volts

* Mycalex Corp. of America, 125 Clifton Blvd., Clifton, N.J.

Trademark(s) ® Registered
Marca(s) Registrada(s)

ELECTRON TUBE DIVISION
RADIO CORPORATION OF AMERICA, HARRISON, NEW JERSEY

8121 10-62
Printed in U.S.A.

DC GRID-No.1 VOLTAGE	-100	max.	volts
DC PLATE CURRENT AT PEAK OF ENVELOPE [c]	450	max.	ma
DC GRID-No.1 CURRENT	100	max.	ma
PLATE DISSIPATION	150	max.	watts
GRID No.2 DISSIPATION	8	max.	watts
PEAK HEATER-CATHODE VOLTAGE:			
Heater negative with respect to cathode	150	max.	volts
Heater positive with respect to cathode	150	max.	volts

Typical CCS Operation with "Two-Tone Modulation":

	At 30 Mc		
DC Plate Voltage	1000	1500	volts
DC Grid-No.2 Voltage [d]	250	250	volts
DC Grid-No.1 Voltage [d]	-20	-20	volts
Zero-Signal DC Plate Current	100	100	ma
Effective RF Load Resistance	2270	3800	ohms
DC Plate Current at Peak of Envelope	210	210	ma
Average DC Plate Current	160	160	ma
DC Grid-No.2 Current at Peak of Envelope	10	10	ma
Average DC Grid-No.2 Current	7	7	ma
Average DC Grid-No.1 Current	0.05 [e]	0.05 [e]	ma
Peak-Envelope Driver Power Output (Approx.) [f]	0.3	0.3	watt
Output-Circuit Efficiency (Approx.)	90	85	%
Distortion Products Level: [g]			
Third Order	35	35	db
Fifth Order	40	40	db
Useful Power Output (Approx.):			
Average	55 [h]	85 [h]	watts
Peak envelope	110 [h]	170 [h]	watts

Maximum Circuit Values:

Grid-No.1-Circuit Resistance Under Any Condition:			
With fixed bias	25000	max.	ohms
With fixed bias (in Class AB_1 operation)	100000	max.	ohms
With cathode bias	Not recommended		
Grid-No.2 Circuit Impedance	10000	max.	ohms
Plate Circuit Impedance	See *Note* j		

RF POWER AMP. & OSCILLATOR — Class C Telegraphy and RF POWER AMPLIFIER — Class C FM Telephony

Maximum CCS Ratings, *Absolute-Maximum Values:*

	Up to 500 Mc		
DC PLATE VOLTAGE	2200	max.	volts
DC GRID-No.2 VOLTAGE	400	max.	volts
DC GRID-No.1 VOLTAGE	-100	max.	volts
DC PLATE CURRENT	300	max.	ma
DC GRID-No.1 CURRENT	100	max.	ma
GRID-No.2 DISSIPATION	8	max.	watts
PLATE DISSIPATION	150	max.	watts
PEAK HEATER-CATHODE VOLTAGE:			
Heater negative with respect to cathode	150	max.	volts
Heater positive with respect to cathode	150	max.	volts

Typical CCS Operation:

	In Grid-Drive Circuit at 50 Mc			
DC Plate Voltage	700	1000	1500	volts
DC Grid-No.2 Voltage	175	200	200	volts
DC Grid-No.1 Voltage	-10	-30	-30	volts
DC Plate Current	300	300	300	ma
DC Grid-No.2 Current	25	20	20	ma
DC Grid-No.1 Current	50	40	40	ma
Driver Power Output (Approx.) [k]	1.2	2.0	2.0	watts
Useful Power Output	120 [h]	175 [h]	275 [h]	watts
In Grid-Drive Circuit at 470 Mc				
DC Plate Voltage	700	1000	1500	volts
DC Grid-No.2 Voltage	200	200	200	volts
DC Grid-No.1 Voltage	-30	-30	-30	volts
DC Plate Current	300	300	300	ma
DC Grid-No.2 Current	10	10	5	ma
DC Grid-No.1 Current	30	30	30	ma
Driver Power Output (Approx.) [k]	5	5	5	watts
Useful Power Output	100 [m]	165 [m]	235 [m]	watts

Maximum Circuit Values:

Grid-No.1-Circuit Resistance Under Any Condition:			
With fixed bias	25000	max.	ohms
Grid-No.2 Circuit Impedance	10000	max.	ohms
Plate Circuit Impedance	See *Note* j		

CHARACTERISTICS RANGE VALUES

	Note	*Min.*	*Max.*	
1. Heater Current	1	1.15	1.45	amp
2. Direct Interelectrode Capacitances:				
Grid-No.1 to plate	2	—	0.13	pf
Grid-No.1 to cathode	2	14.3	17.7	pf
Plate to cathode	2	0.0065	0.0155	pf
Grid-No.1 to grid-No.2	2	19.8	24.2	pf
Grid-No.2 to plate	2	5.7	7.1	pf
Grid-No.2 to cathode	2	2.6	3.6	pf
Cathode to heater	2	2.5	4.1	pf
3. Grid-No.1 Voltage	1,3	-8	-19	volts
4. Reverse Grid-No.1 Current	1,3	—	-25	μa
5. Grid-No.2 Current	1,3	-7	+6	ma
6. Peak Emission	1,4	13	—	peak amp
7. Interelectrode Leakage Resistance	5	1.0	—	megohm

Note 1: With 13.5 volts ac or dc on heater.

Note 2: Measured with special shield adapter.

Note 3: With dc plate voltage at 700 volts, dc grid-No.2 voltage of 250 volts, and dc grid-No.1 voltage adjusted to give a dc plate current of 185 ma.

Note 4: For conditions with grid No.1, grid No.2, and plate tied together; and pulse voltage source connected between plate and cathode. Pulse duration is 2.5 microseconds and pulse repetition frequency is 60 pps. The voltage-pulse amplitude is 200 volts peak. After 1 minute at this value, the current-pulse amplitude will not be less than the value specified.

Note 5: Under conditions with tube at 20° to 30° C for at least 30 minutes without any voltages applied to the tube. The minimum resistance between any two electrodes as measured with a 200-volt Megger-type ohmmeter having an internal impedance of 1.0 megohm, will be 1.0 megohm.

[a] Because the cathode is subjected to back bombardment as the frequency is increased with resultant increase in temperature, the heater voltage should, for optimum life, be reduced to a value such that at the heater voltage obtained at minimum supply voltage conditions (all other voltages constant) the tube performance just starts to show some degradation; e.g., at 470 Mc, heater volts = 12.5 (Approx.).

[b] Measured with special shield adapter.

[c] The maximum rating for a signal having a minimum peak-to-average power ratio less than 2, such as is obtained in "Single-Tone" operation, is 300 ma. During short periods of circuit adjustment under "Single-Tone" conditions, the average plate current may be as high as 450 ma.

[d] Obtained preferably from a separate, well regulated source.

[e] This value represents the approximate grid-No.1 current obtained due to initial electron velocities and contact-potential effects when grid No.1 is driven to zero volts at maximum signal.

[f] Driver power output represents circuit losses and is the actual power measured at input to grid-No.1 circuit. The actual power required depends on the operating frequency and the circuit used. The tube driving power is approximately zero watts.

[g] With maximum signal output used as a reference, and without the use of feedback to enhance linearity.

[h] This value of useful power is measured at load of output circuit.

[j] The tube should see an effective plate supply impedance which limits the peak current through the tube under surge conditions to 15 amperes.

[k] Driver power output includes circuit losses and is the actual power measured at the input to the grid circuit. It will vary depending upon the frequency of operation and the circuit used.

[m] Measured in a typical coaxial-cavity circuit.

DEFINITIONS

CCS - Continuous Commercial Service

Rating System - The *maximum ratings* in the tabulated data are established in accordance with the following definition of the *Absolute-Maximum Rating System* for rating electron devices:

Absolute-Maximum ratings are limiting values of operating and environmental conditions applicable to any electron device of a specified type as defined by its published data, and should not be exceeded under the worst probable conditions.

The device manufacturer chooses these values to provide acceptable serviceability of the device, taking no responsibility for equipment variations, environment variations, and the effects of changes in operating conditions due to variations in device characteristics.

The equipment manufacturer should design so that initially and throughout life no absolute-maximum value for the intended service is exceeded with any device under the worst probable operating conditions with respect to supply-voltage variation, equipment component variation, equipment control adjustment, load variation, signal variation, environmental conditions, and variations in device characteristics.

Two-Tone Modulation - Two-Tone Modulation operation refers to that class of amplifier service in which the input consists of two monofrequency rf signals having equal peak amplitude.

GENERAL CONSIDERATIONS

Temperature

The maximum terminal temperature of 250° C and the maximum radiator core temperature of 250° C are tube ratings and are to be observed in the same manner as other ratings. The temperature may be measured with temperature-sensitive paint, such as Tempilaq. The latter is made by the Tempil Corporation, 132 W. 22nd Street, New York 11, N.Y.

Mounting

The plate connection to the 8121 may be made by a metal band or spring contacts to the larger fin of the radiator which is located at the base end.

If rigid connections are made to more than one plane (base, flange, and radiator), adjustment must be made in a plane normal to the major tube axis to compensate for variations in concentricity for the associated parts of the tube. See *Dimensional Outline.*

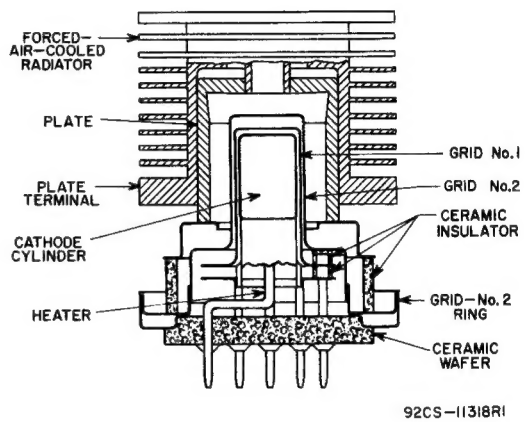

Fig.1 - Structural Arrangement of Type 8121.

ELECTRICAL CONSIDERATIONS

Grid No.1

Grid No.1 of the 8121 in uhf service is subjected to heating caused not only by the normal electron bombardment as indicated by the grid current, but also by radiation from the cathode and circulating rf currents. For these reasons, more than ordinary care must be taken during operation to prevent exceeding the grid-No.1 current rating and the maximum grid-No.1 terminal temperature rating.

Grid No.2

The grid No.2 current of the 8121 may be negative under certain operating conditions. The voltage for grid No.2 should be obtained from a source of good regulation; if a separate source is used, a maximum impedance of 10000 ohms and a minimum divider current of 40 ma are required; if a voltage divider from the plate supply is used, a maximum impedance of 10000 ohms between the grid-No.2 and ground is required. The plate voltage should be applied before or simultaneously with grid-No.2 voltage; otherwise, with voltage on grid-No.2 only, its current may be large enough to cause excessive grid-No.2 dissipation.

The grid-No.2 current is a very sensitive indication of plate-circuit loading. When the 8121 is operated without load, the grid-No.2 current rises excessively, often to a value which damages the tube. Therefore, care should be taken when tuning the 8121 circuit under no-load or lightly loaded conditions to prevent exceeding the grid-No.2 input rating of the tube. In this connection, reduction of the grid-No.2 voltage will be helpful.

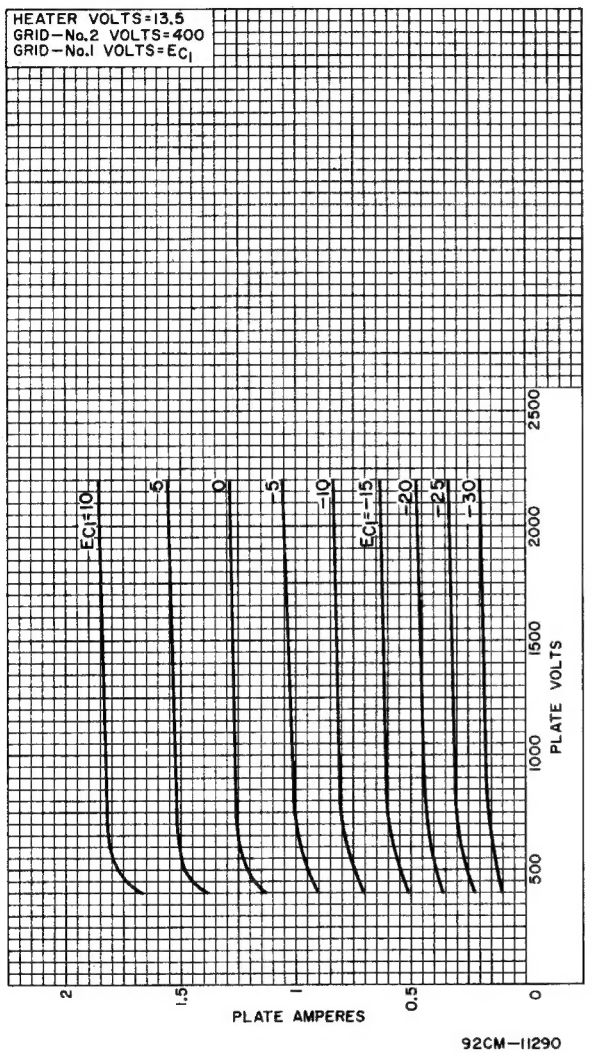

Fig.2 - Typical Plate Characteristics of Type 8121.

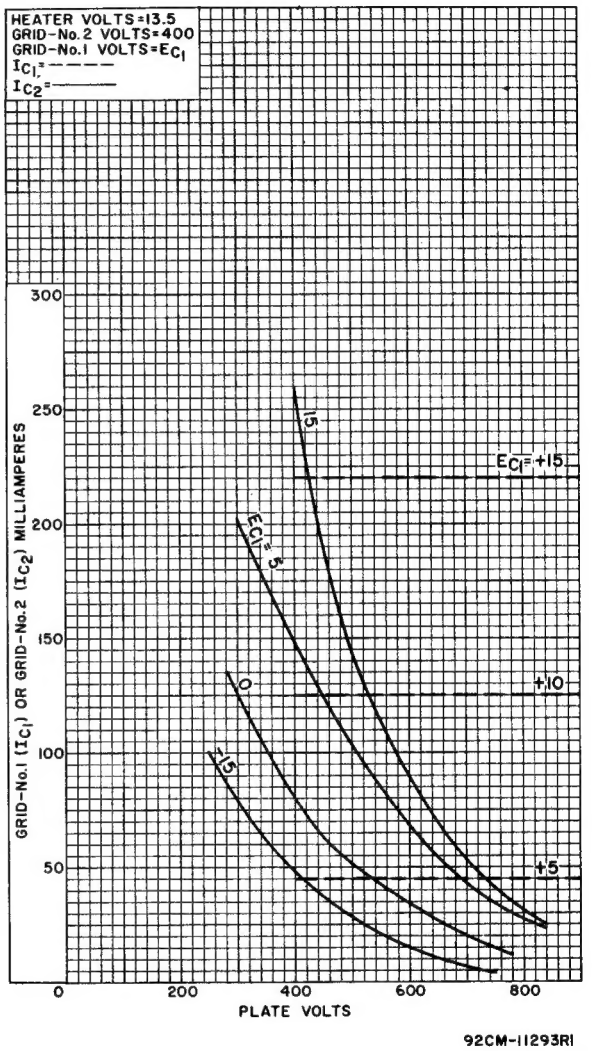

Fig.3 - Typical Characteristics of Type 8121.

Plate

In tubes, such as the 8121, having very closely spaced electrodes, extremely high voltage gradients occur even with moderate tube operating voltages. Any tube flash-arcing may be destructive. It is recommended that each tube see an effective plate supply impedance which limits the peak current through the tube under surge conditions to 15 amperes. Failure of the tubes due to internal flashing is more prevalent when the circuit is not tuned to optimum conditions. Even though laboratory tests indicate that no such protection is needed, poor circuit adjustment in the field may result in shortened tube life.

Driver

The driver power output shown in the typical operation for the 8121 in rf service is considerably more than is normally calculated for typical driving power input in order to permit considerable range of adjustment, and also to provide for losses in the grid-No.1 circuits and the coupling circuits. This consideration is particularly important at the higher frequencies where circuit losses, radiation losses, and transit-time losses increase, and the effects of cathode-lead inductive reactance becomes significant.

Cathode-Drive Circuits

In cathode-drive circuits, driver power output and the developed rf power output act in series to supply the load circuit. If the driving voltage and grid-No.1 current are increased, the output will always increase. Such is not the case in a grid-drive circuit where a saturation effect takes place, i.e., above a certain value of driving voltage and current, the output increases very slowly and may even decrease. It is important to recognize this difference and not try to saturate a cathode-drive stage because the maximum grid-No.2 input may easily be exceeded.

In tuning a cathode-drive rf amplifier, it must be remembered that variations in the load on the output stage will produce corresponding variations in the load on the driving stage. This effect will be noticed by the simultaneous increase in plate currents of both the output and driving stages.

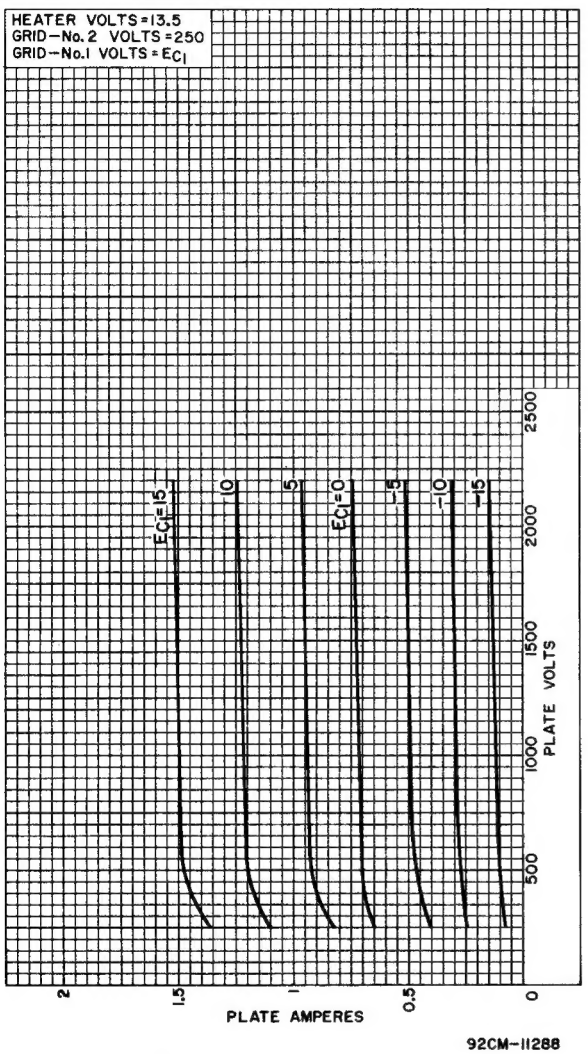

Fig.4 - Typical Plate Characteristics of Type 8121.

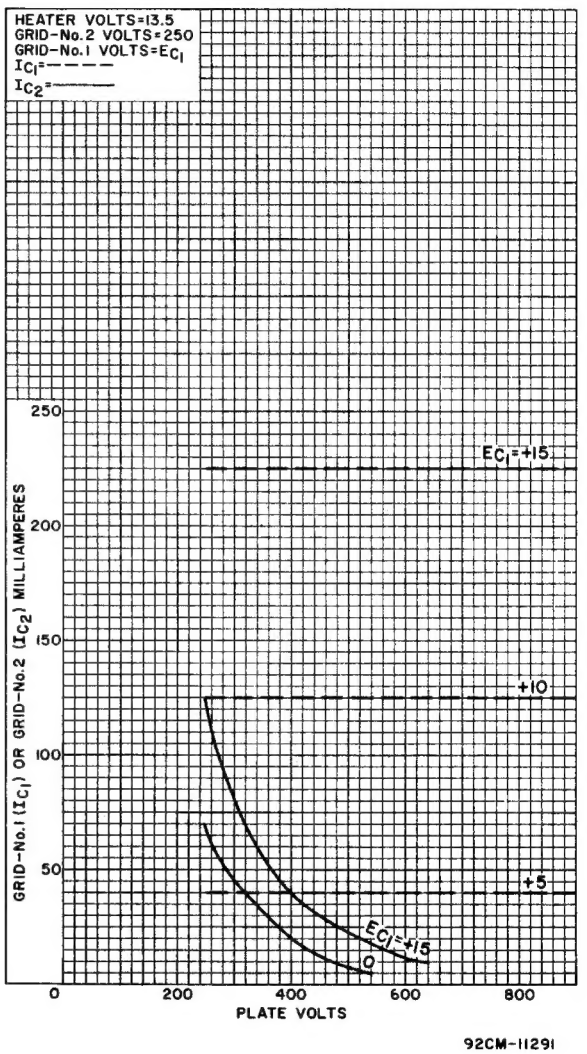

Fig.5 - Typical Characteristics of Type 8121.

Class C RF Telegraphy Service

In class C rf telegraphy service, the 8121 may be supplied with bias by any convenient method except when the tube is used in the final amplifier or a preceding stage of a transmitter designed for break-in operation and oscillator keying. In this case, an amount of fixed bias must be used to limit the plate current and, therefore, the plate dissipation to a safe value.

Standby Operation

During standby periods in intermittent operation, the heater voltage may be maintained at normal operating value for most applications.

In those applications which require maximum reliability, it is recommended that the heater voltage be maintained at normal operating value when the period is less than 15 minutes; that it be reduced to 80 per cent of normal when the period is between 15 minutes and 2 hours; and that for longer periods, the heater voltage should be turned off.

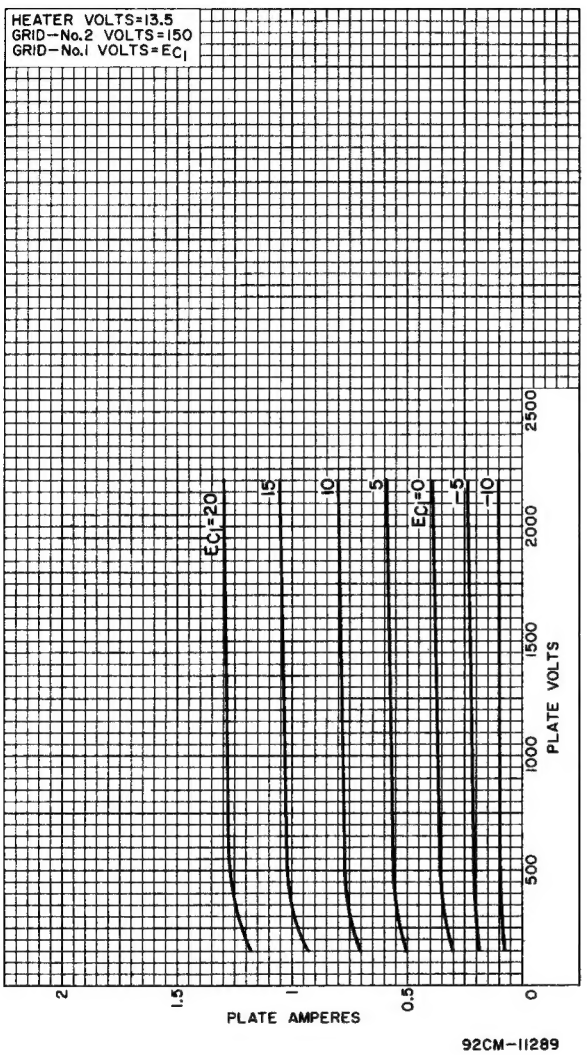

Fig. 6 - Typical Plate Characteristics of Type 8121.

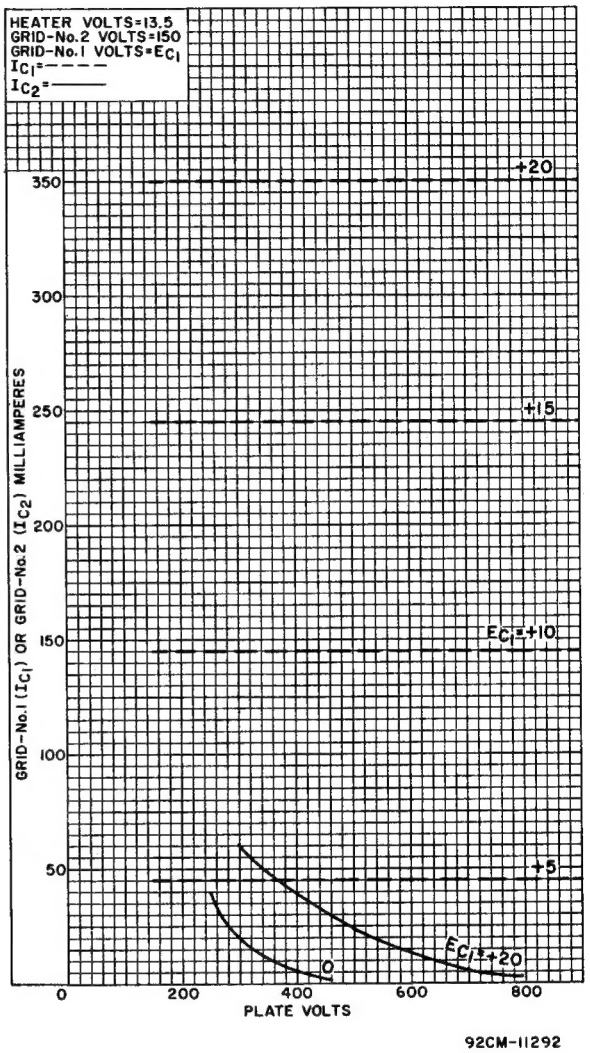

Fig. 7 - Typical Characteristics of Type 8121.

Protective Devices

Protective devices should be used to protect not only the plate but also grid No.2 against overload. In order to prevent excessive plate-current flow and resultant overheating of the tube, the common ground lead of the plate circuit should be connected in series with the coil of an instantaneous overload relay. This relay should be adjusted to remove the dc plate and grid-No.2 voltage when the average value of plate current reaches a value slightly higher than normal plate current. A protective device in the grid-No.2 supply should remove the grid-No.2 voltage when the dc grid-No.2 current reaches a value slightly higher than normal.

Precautions

The rated plate and grid-No.2 voltages of this tube are extremely dangerous. Great care should be taken during the adjustment of circuits. The tube and its associated apparatus, especially all parts which may be at high potential above ground, should be housed in a protective enclosure. The protective housing should be designed with interlocks so that personnel can not possibly come in contact with any high-potential point in the electrical system. The interlock devices should function to break the primary circuit of the high-voltage supplies when any gate or door on the protective housing is opened,

and should prevent the closing of the primary circuit until the door is again locked.

COOLING CONSIDERATIONS

System

Forced-air cooling of the 8121 is required as indicated in Fig.8. A suitable air filter is required in the air supply. Care should be given to cleaning or replacing the filter at intervals in order that accumulated dirt will not obstruct the required flow of air through the radiator.

Precautions

The cooling system should be properly installed to insure safe operation of the tube under all conditions and for this reason should be electrically interconnected with the heater and plate power supplies. This arrangement is necessary to make sure that the tube is supplied with air simultaneously with electrode voltages. Airflow interlocks which open the power transformer primaries are desirable for protecting the tube when the air flow is insufficient or ceases.

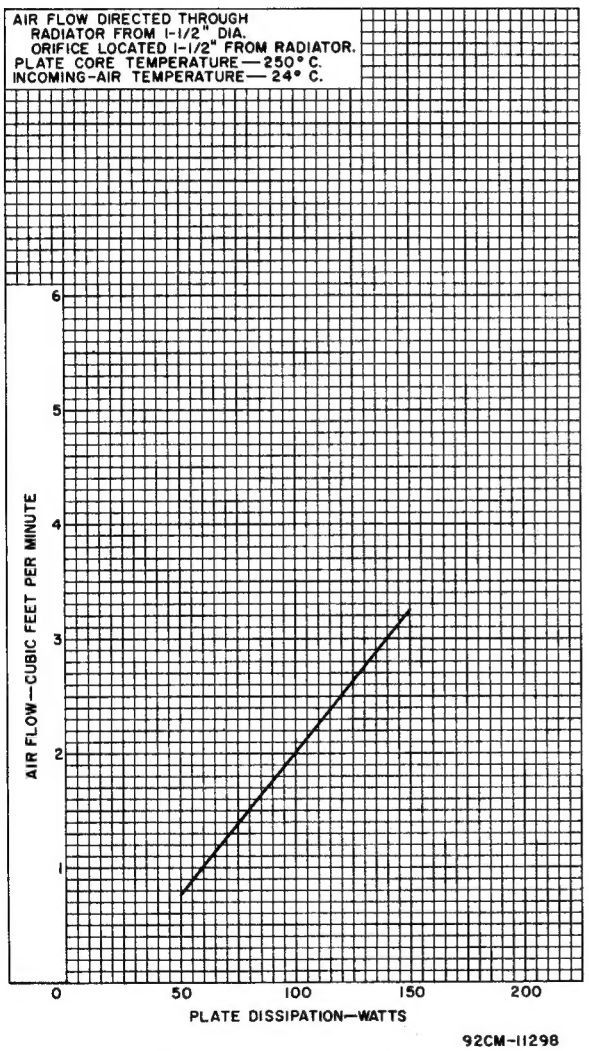

Fig.8 - Typical Cooling Requirements for Type 8121.

BASING DIAGRAM

Bottom View

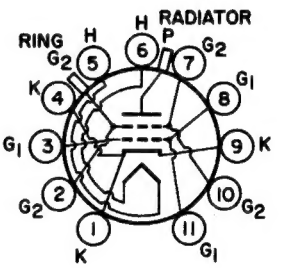

PIN 1: CATHODE
PIN 2: GRID No.2
PIN 3: GRID No.1
PIN 4: CATHODE
PIN 5: HEATER
PIN 6: HEATER
PIN 7: GRID No.2
PIN 8: GRID No.1
PIN 9: CATHODE
PIN 10: GRID No.2
PIN 11: GRID No.1
RADIATOR: PLATE TERMINAL
RING: GRID-No.2 TERMINAL CONTACT SURFACE (For use at higher frequencies)

Information furnished by RCA is believed to be accurate and reliable. However, no responsibility is assumed by RCA for its use; nor for any infringements of patents or other rights of third parties which may result from its use. No license is granted by implication or otherwise under any patent or patent rights of RCA.

DIMENSIONAL OUTLINE

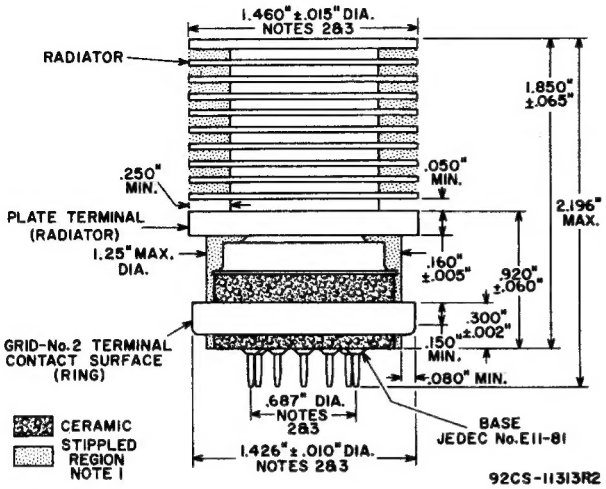

NOTE 1: KEEP ALL STIPPLED REGIONS CLEAR. DO NOT ALLOW CONTACTS OR CIRCUIT COMPONENTS TO PROTRUDE INTO THESE ANNULAR VOLUMES.

NOTE 2: THE DIAMETERS OF THE RADIATOR, GRID-No.2 TERMINAL CONTACT SURFACE, AND PIN CIRCLE TO BE CONCENTRIC WITHIN THE FOLLOWING VALUES OF MAXIMUM FULL INDICATOR READING:

Radiator to Grid-No.2 Terminal Contact Surface	0.030" max.
Radiator to Pin Circle	0.040" max.
Grid-No.2 Terminal Contact Surface to Pin Circle	0.030" max.

NOTE 3: THE FULL INDICATOR READING IS THE MAXIMUM DEVIATION IN RADIAL POSITION OF A SURFACE WHEN THE TUBE IS COMPLETELY ROTATED ABOUT THE CENTER OF THE REFERENCE SURFACE. IT IS A MEASURE OF THE TOTAL EFFECT OF RUN-OUT AND ELLIPTICITY.

BASE DRAWING
LARGE-WAFER ELEVENAR
11-PIN WITH RING
JEDEC No.E11-81

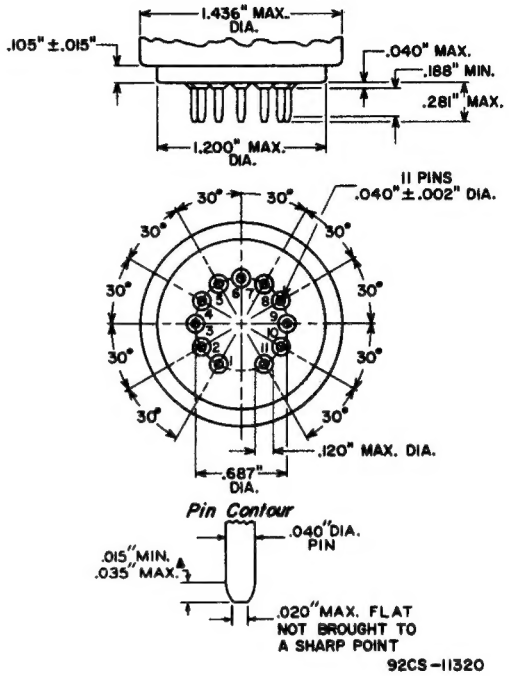

▲ THIS DIMENSION AROUND THE PERIPHERY OF ANY INDIVIDUAL PIN MAY VARY WITHIN THE LIMITS SHOWN.

GAUGE DRAWING
JEDEC No.GE11-1

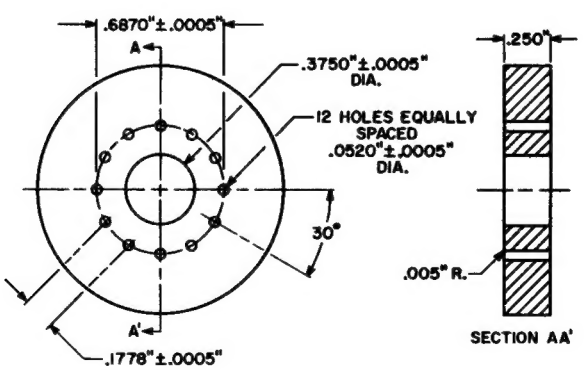

92CS-11310